FIRE BRIGADE
NO.21503
6+ AGES

FIRE BRIGADE
FIRE ENGINE
FIRE FIGHT

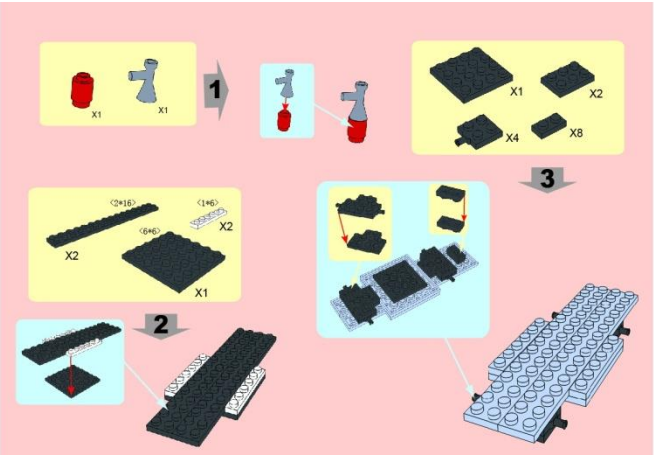
1
2
3

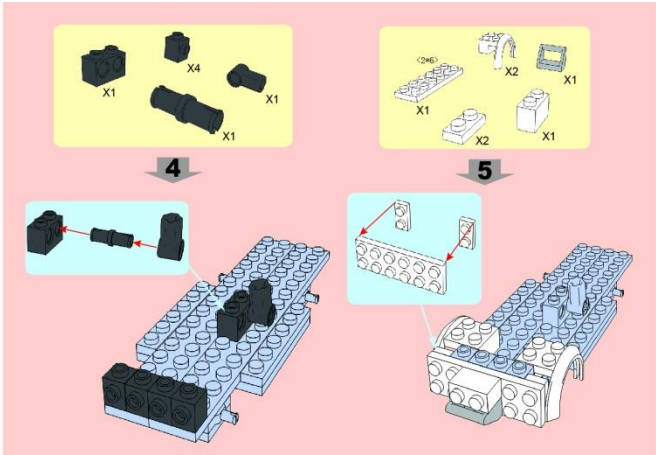
4
5

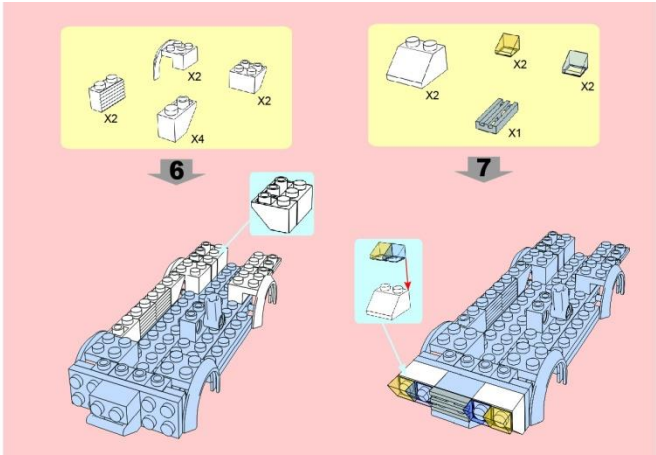
6
7

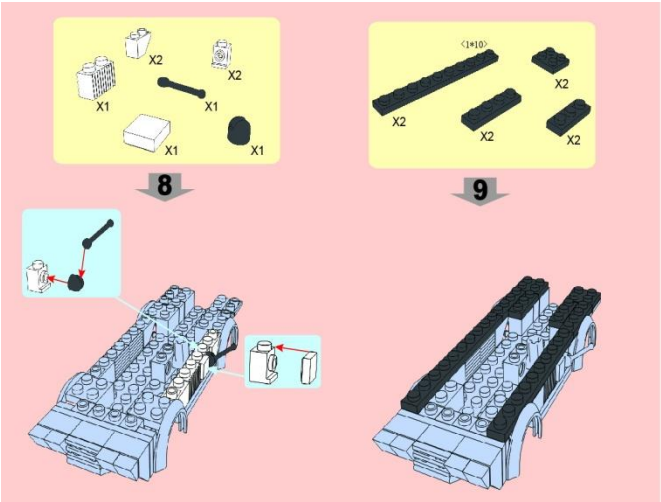
8
9

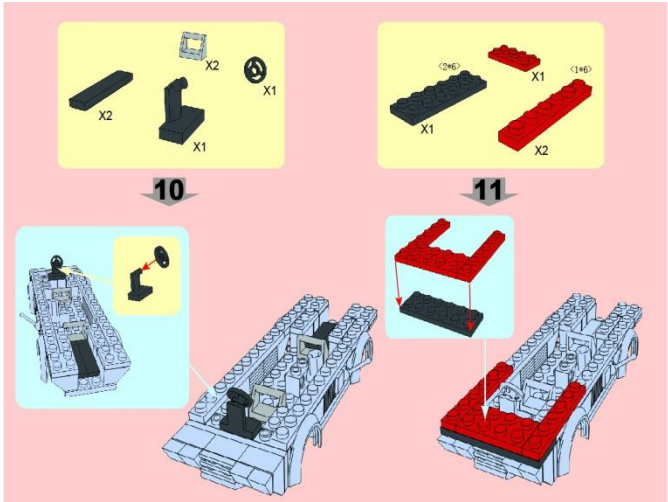
10
11

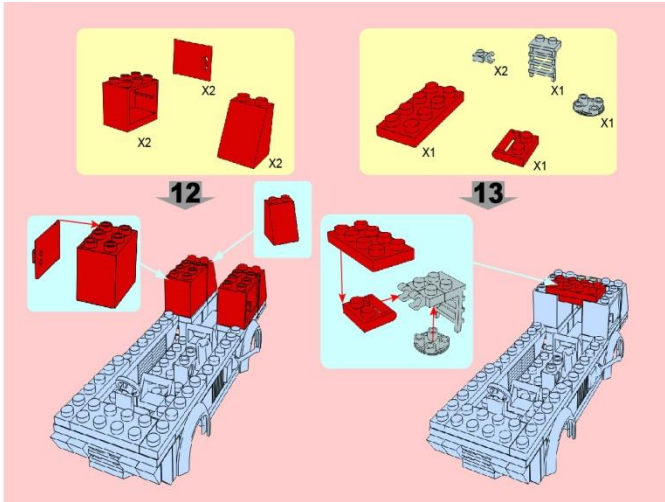
12
13

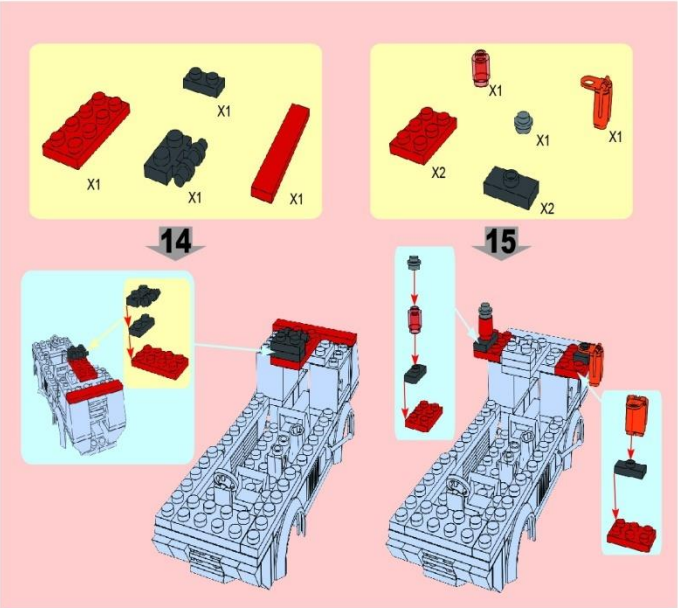
X1
X1
X1
X1
X1
X1
X2
X2
14
15

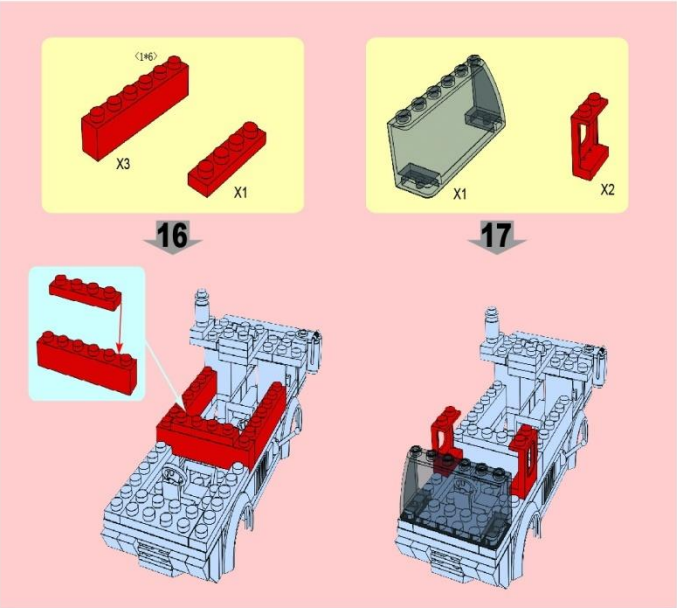
〈1*6〉
X3
X1
X1
X2
16
17

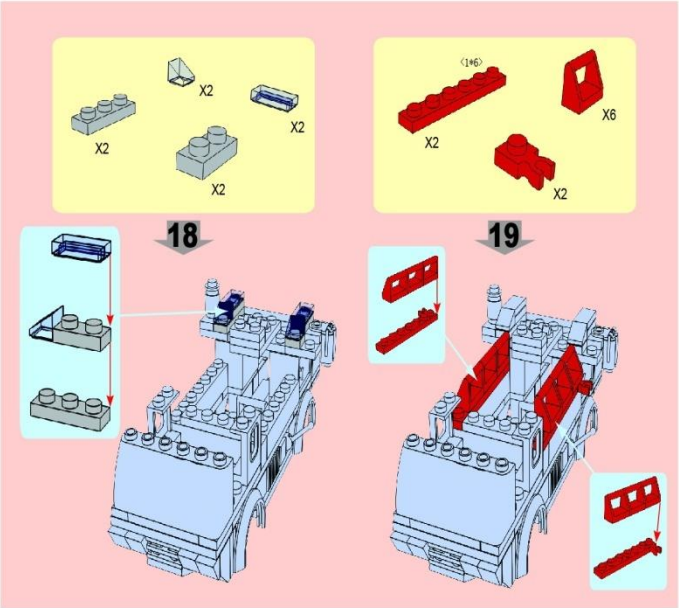
X2
X2
X2
X2
〈1*6〉
X2
X6
X2
18
19

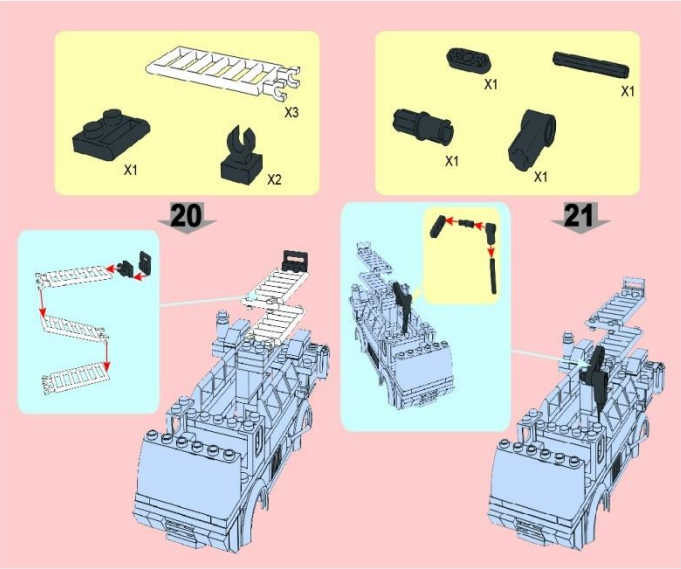
X3
X1
X2
X1
X1
X1
X1
20
21

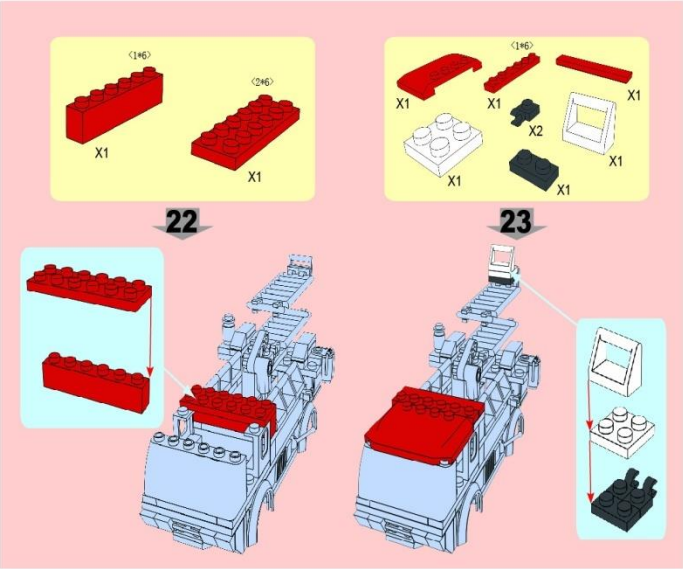
〈1*6〉
〈2*6〉
X1
X1
〈1*6〉
X1
X1
X1
X2
X1
X1
X1
22
23

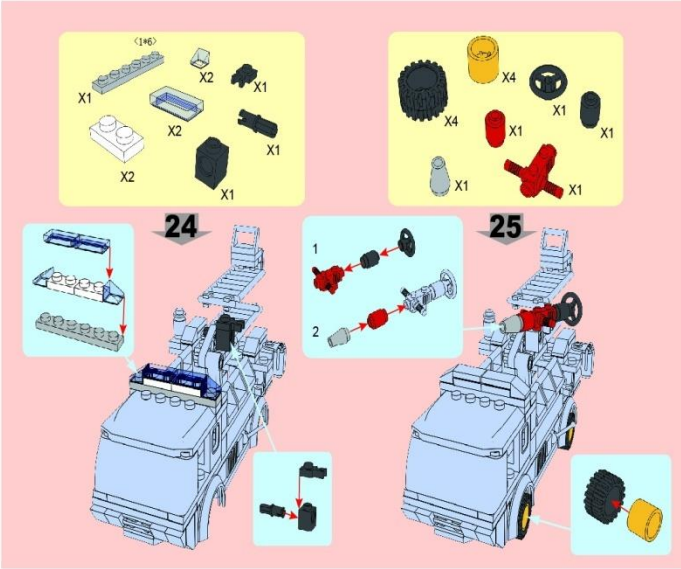
〈1*6〉
X1
X2
X1
X2
X2
X1
X2
X1
X4
X4
X1
X1
X1
X1
X1
1
2
24
25