ENLIGHTEN
啓蒙
1016
KNIGHTS
Castle Series
AGES 6+
84 pieces
2 fighters
SENTRY POST

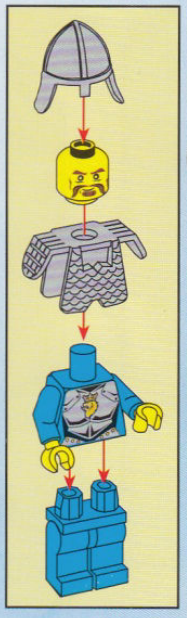

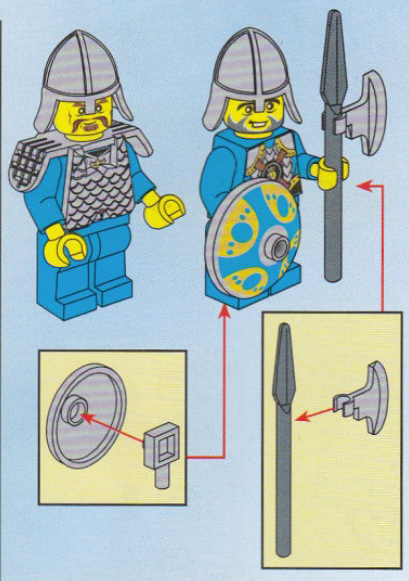

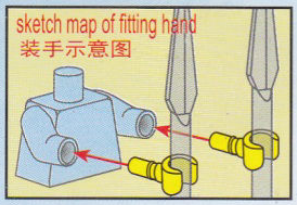
sketch map of fitting hand
装手示意图

1

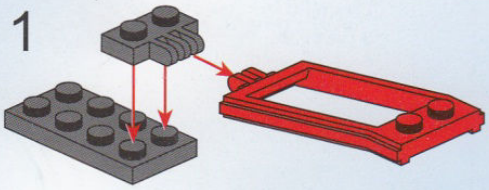

2

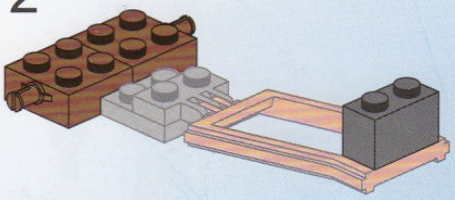

3

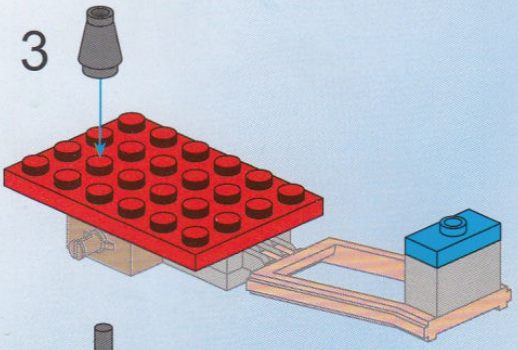

4

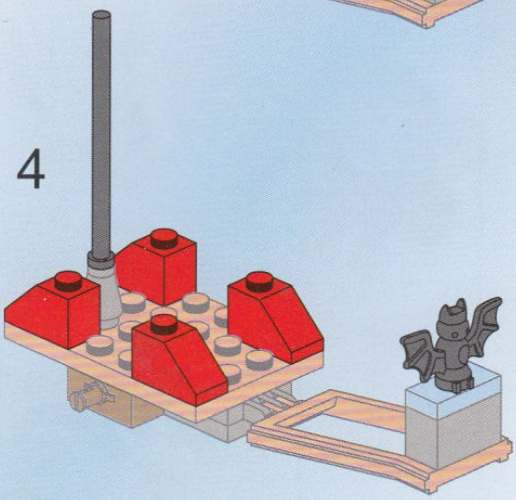

5

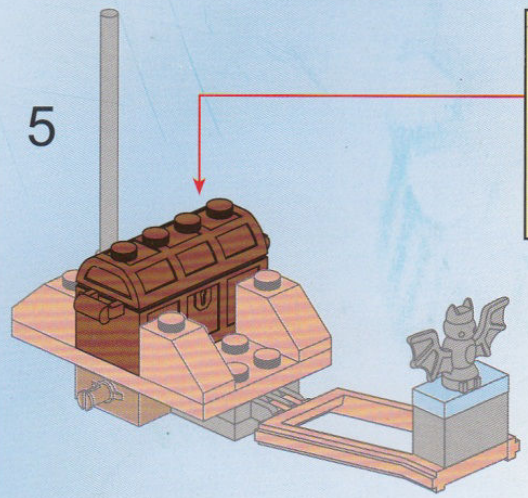

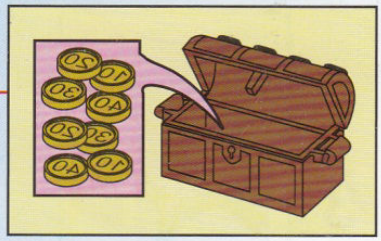

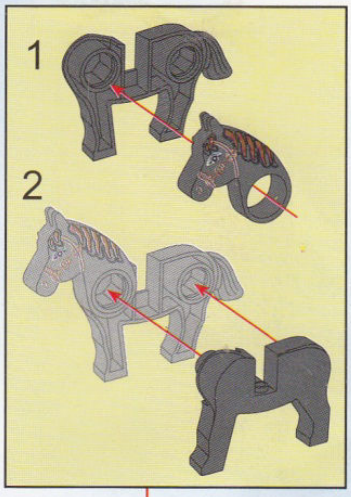
1
2

6

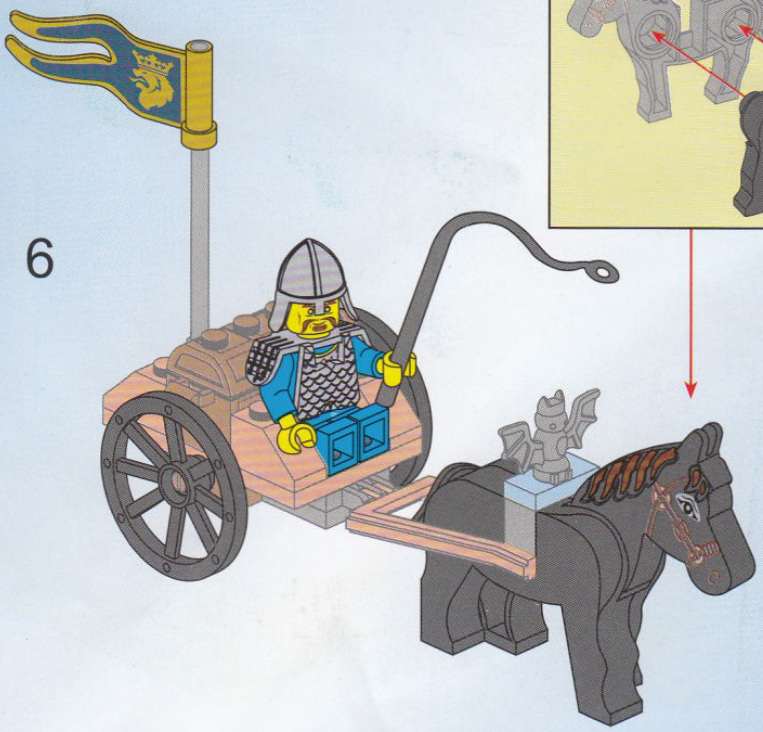

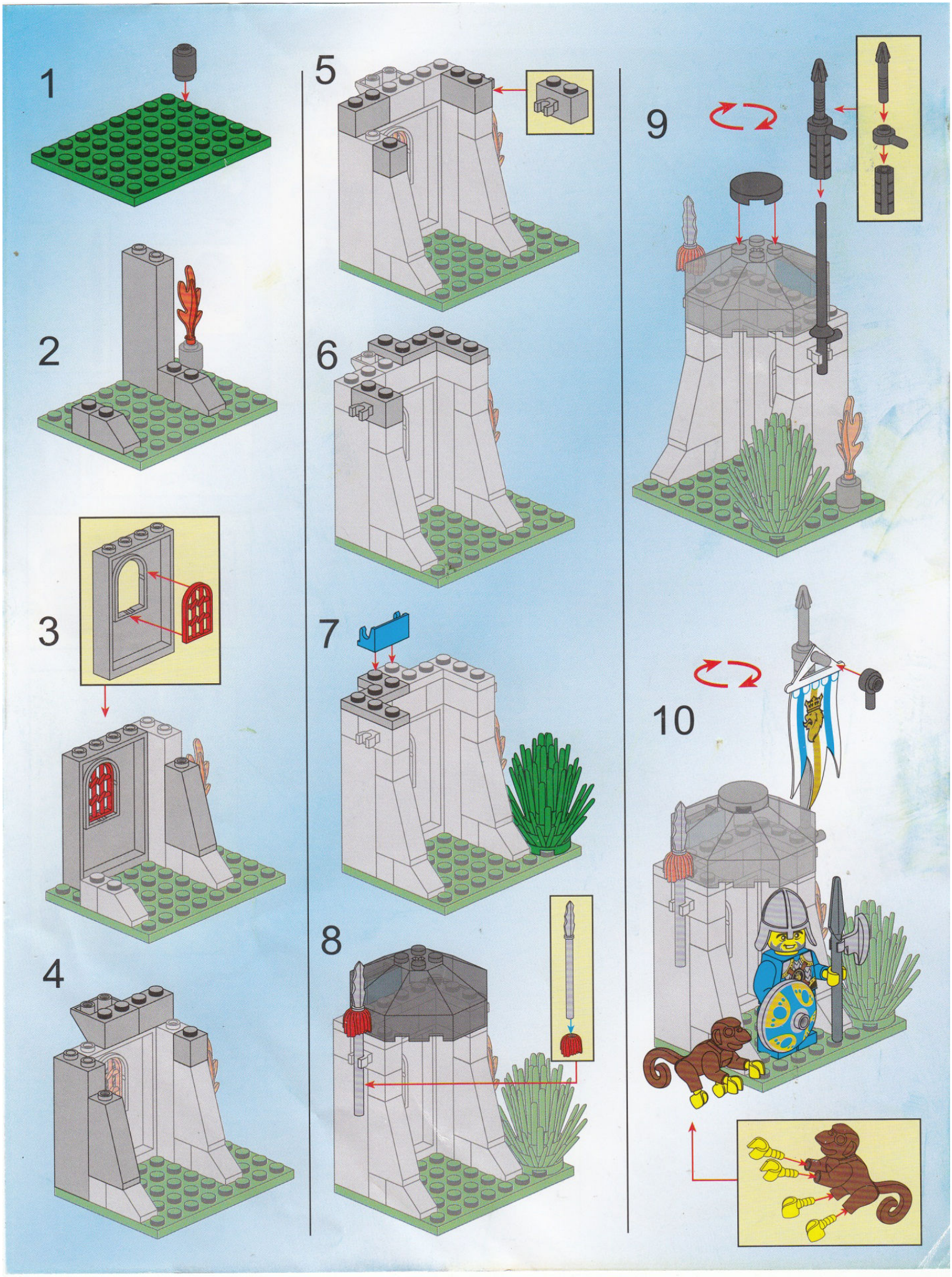
1
2
3
4
5
6
7
8
9
10