FREYA
TRADITION OF QUALITY

INSTRUCTION

Model: FR2537WL-01W

Wall Lamp

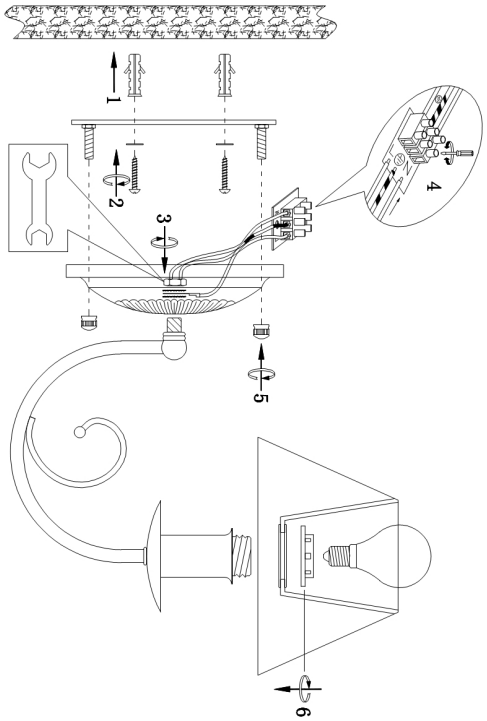

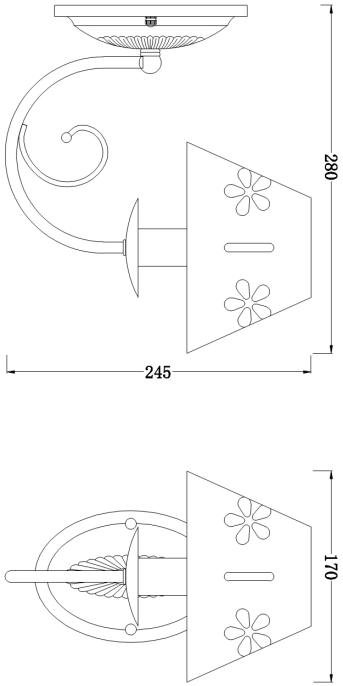

1 x E14 (60W)

FREYA-LIGHT.COM