ENGINEERING
CONSTRUCTION
NO.29102
6+
ENGINEER

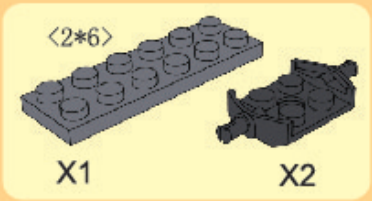
〈2*6〉
X1
X2

1

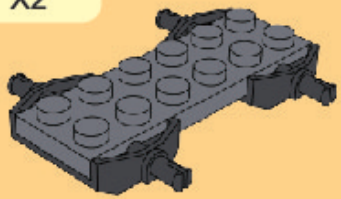

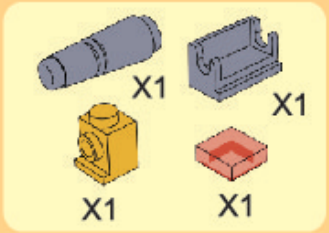
X1
X1
X1
X1

2

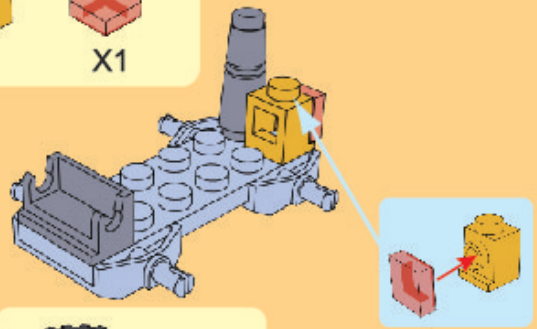

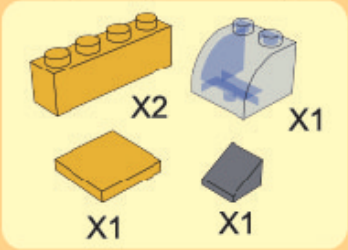
X2
X1
X1
X1

3

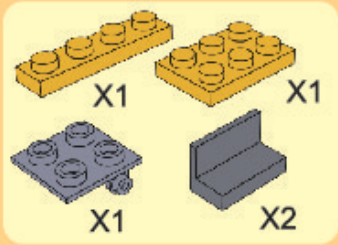
X1
X1
X1
X2

4

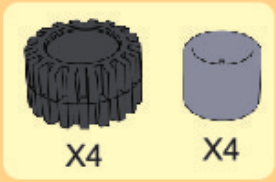
X4
X4
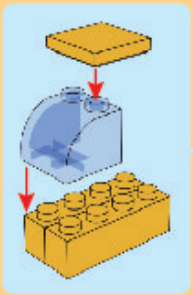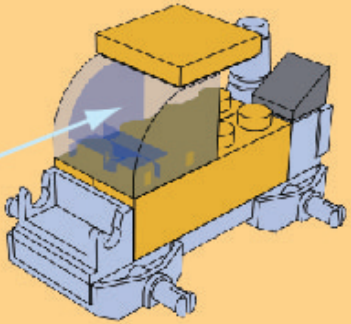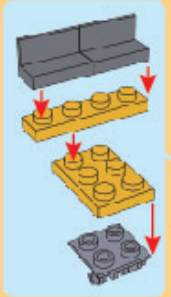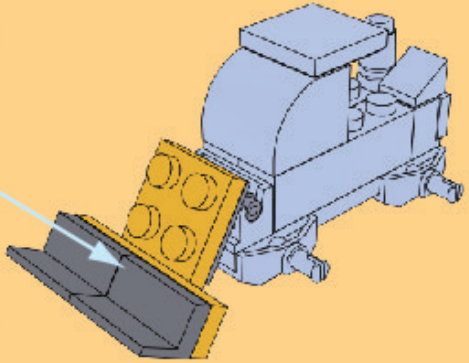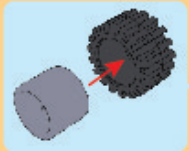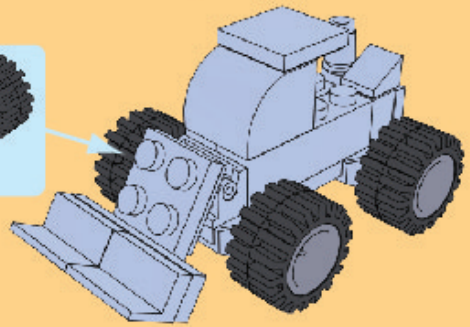
5