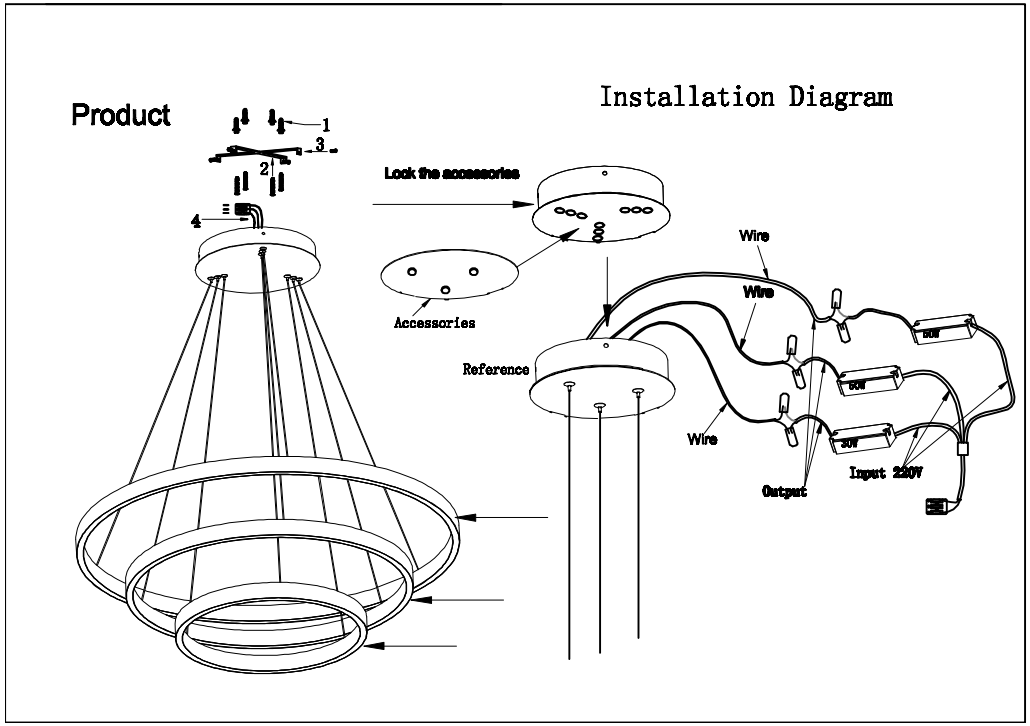
Product
Installation Diagram
1
2
3
4
Lock the accessories
Accessories
Reference
Wire
Wire
Wire
50W
50W
50W
Output
Input 220V

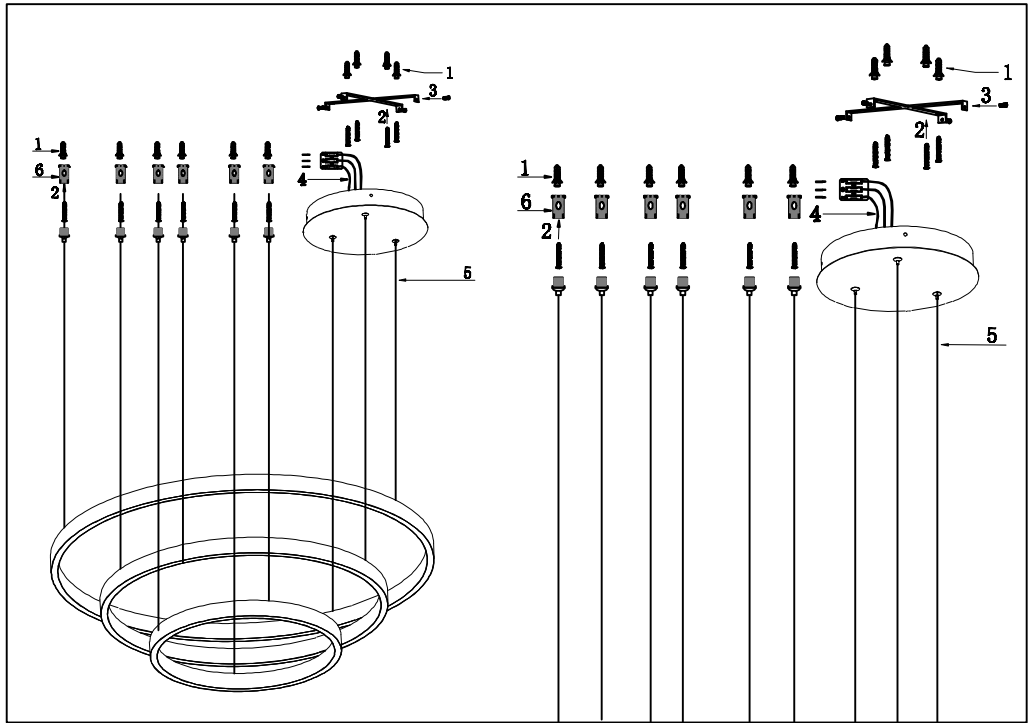
1
2
3
4
5
6

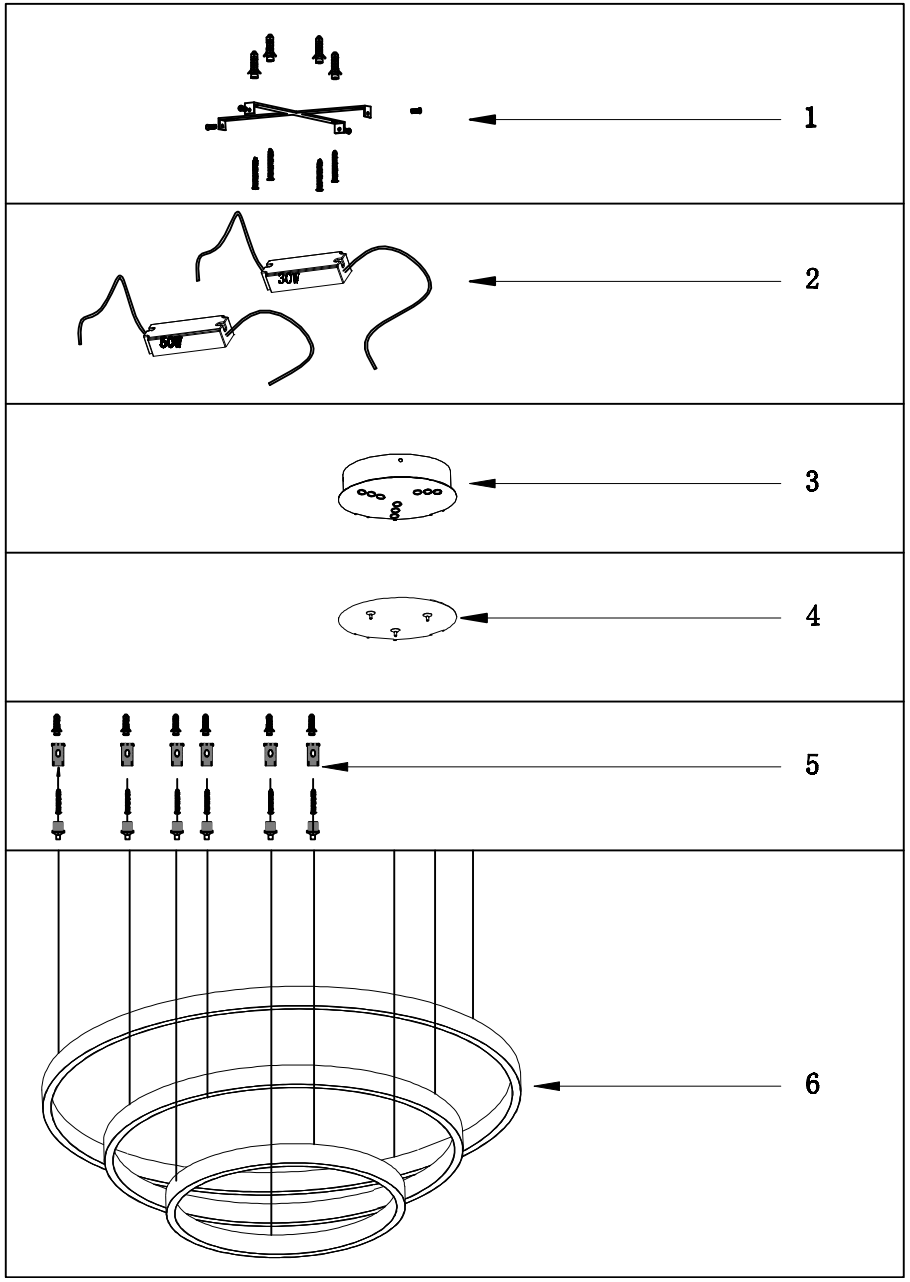
1
30W
60W
2
3
4
5
6

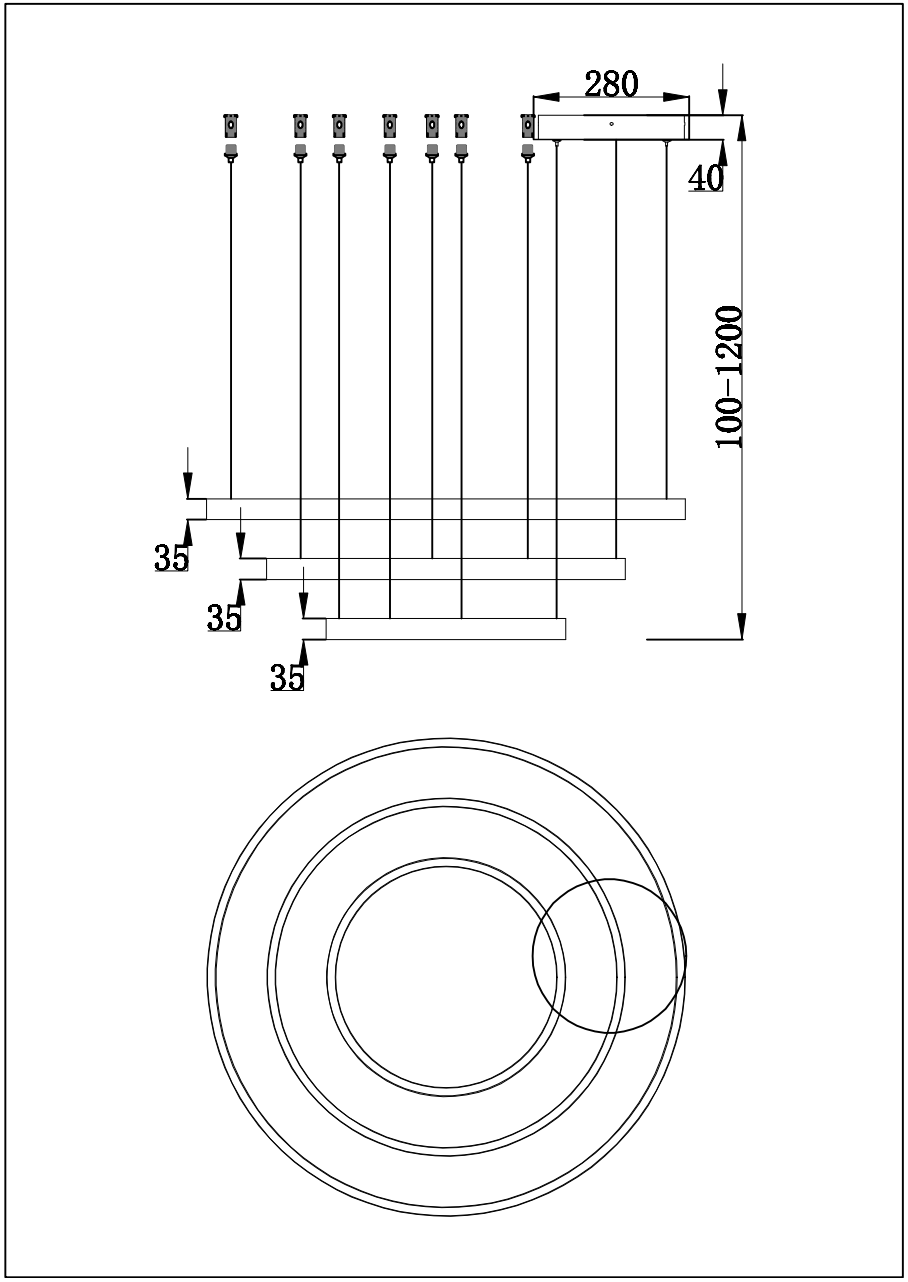
280
40
100-1200
35
35
35