ASSEMBLY INSTRUCTION

ИНСТРУКЦИЯ
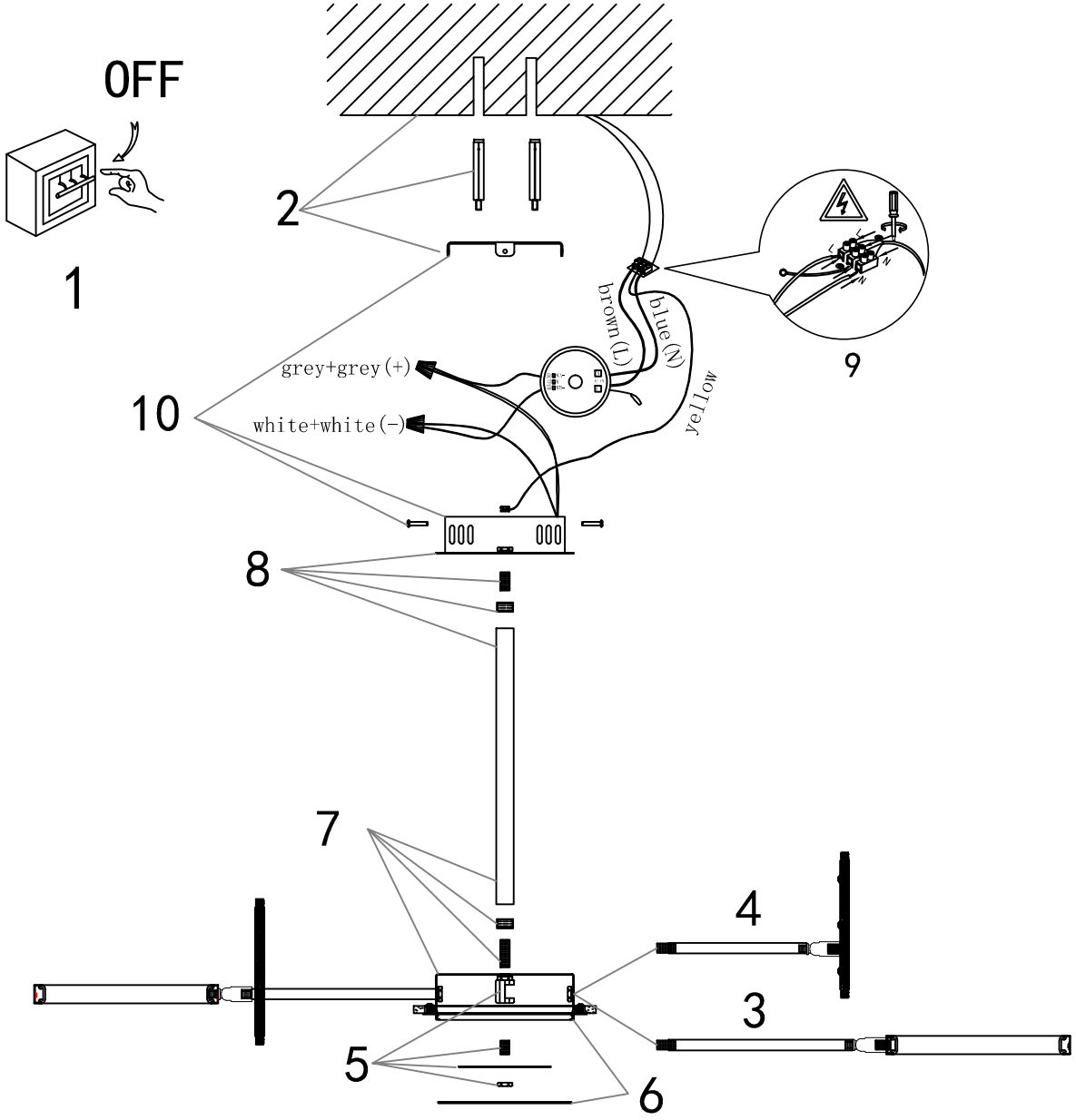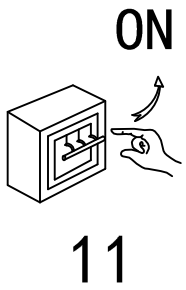
A1363PL-6PB