ARTE LAMP

ASSEMBLY INSTRUCTION

ИНСТРУКЦИЯ

A3216PL-1BK
A3216PL-1WH
A3216PL-1GY
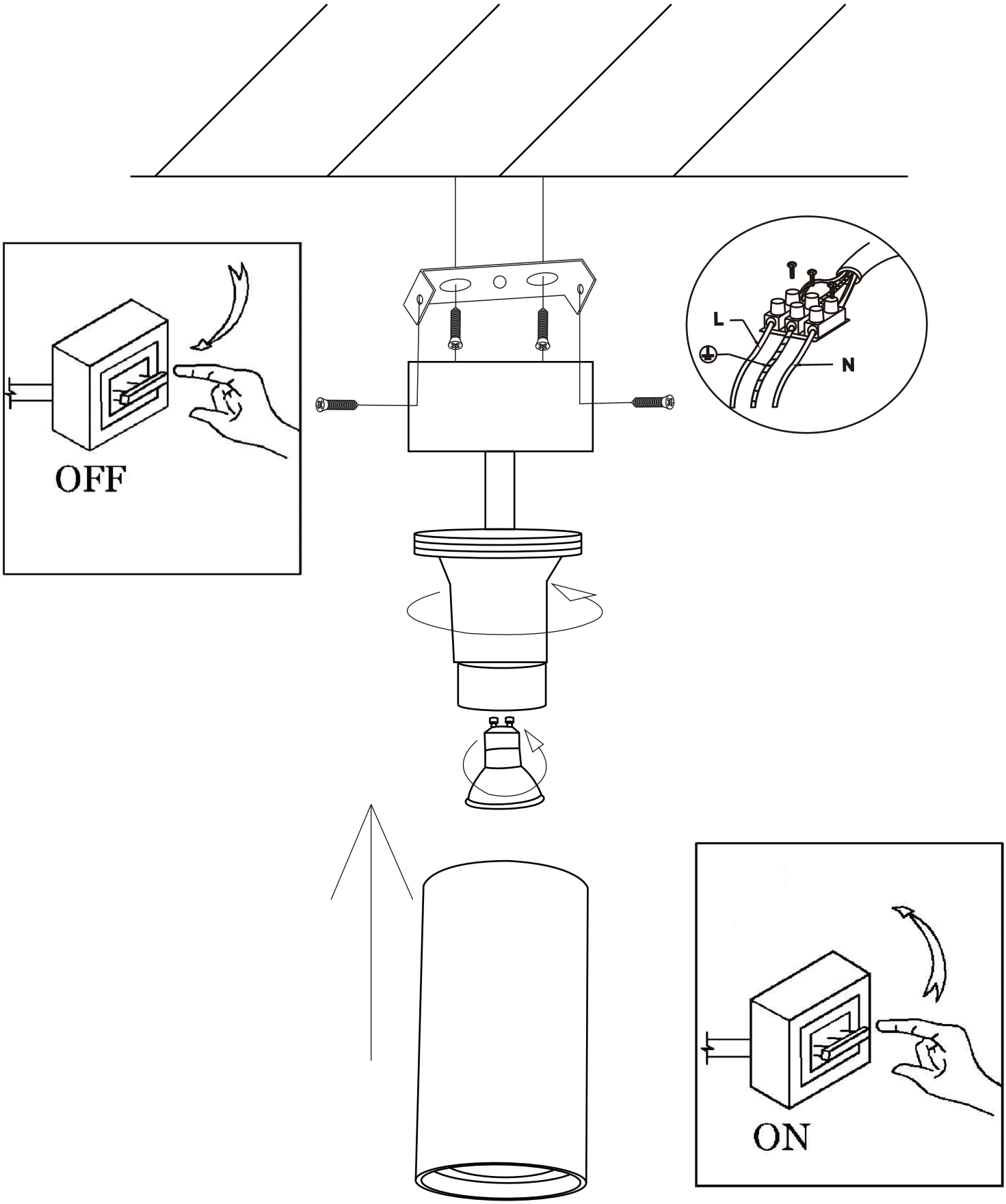
A