ARTE LAMP

ASSEMBLY INSTRUCTION

A6098AP-1WG

ИНСТРУКЦИЯ

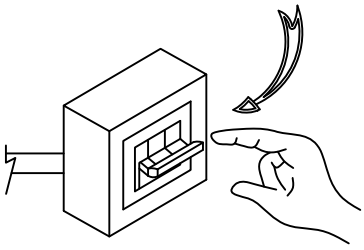

OFF 1

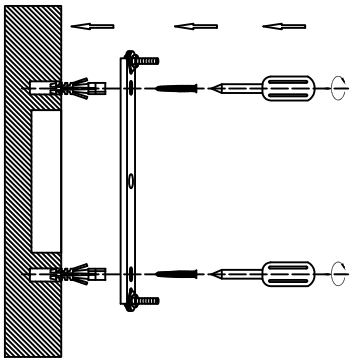

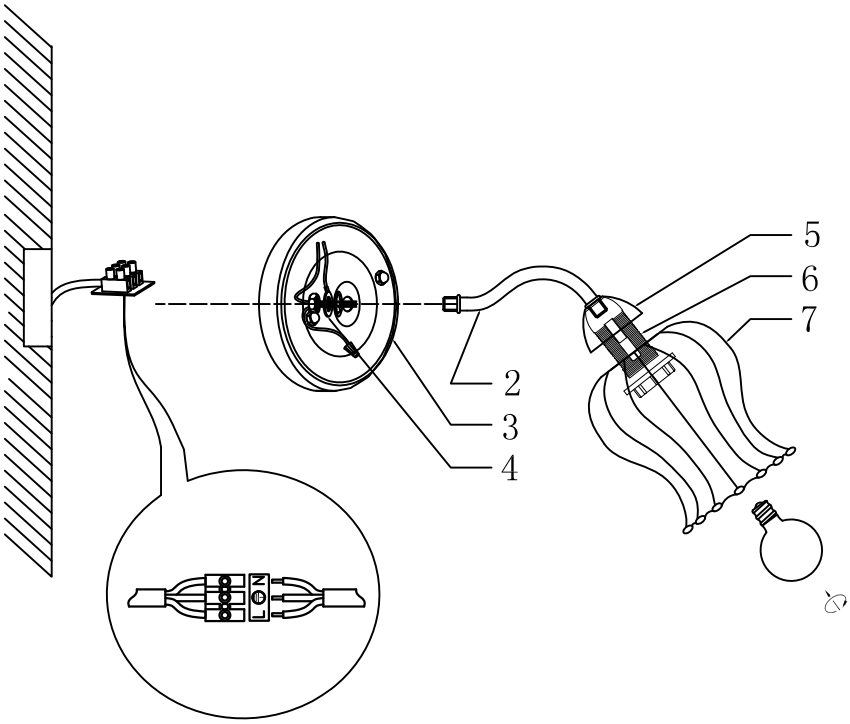

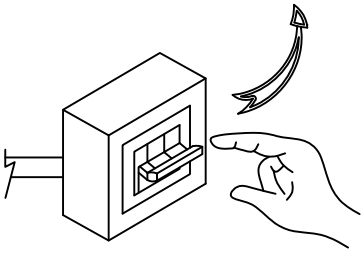

ON 8