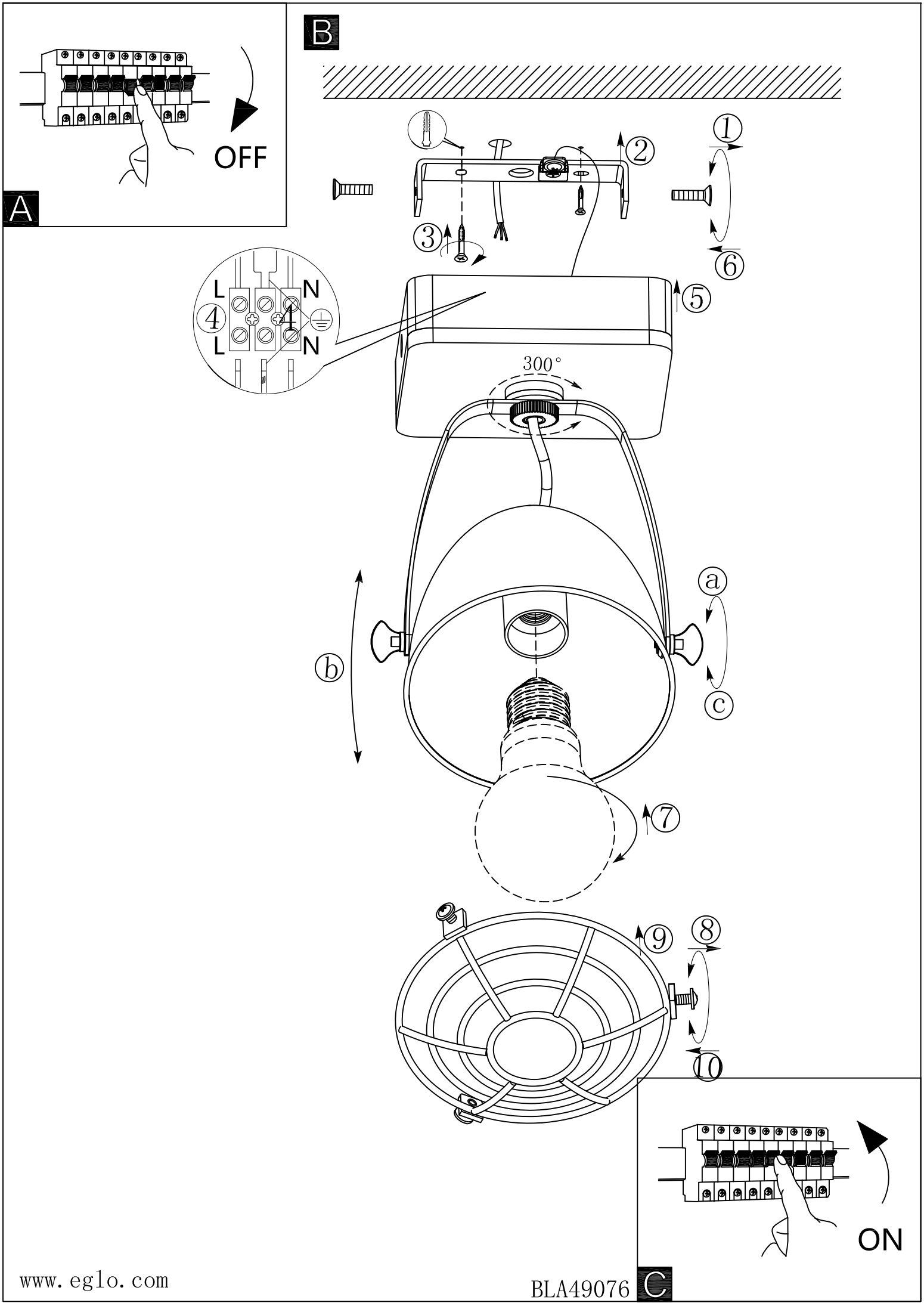
A
OFF
B
①
②
③
④
⑤
⑥
L
N
L
N
300°
a
b
c
⑦
⑧
⑨
⑩
C
ON