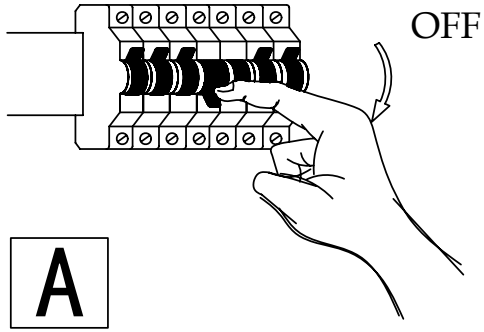

A

B

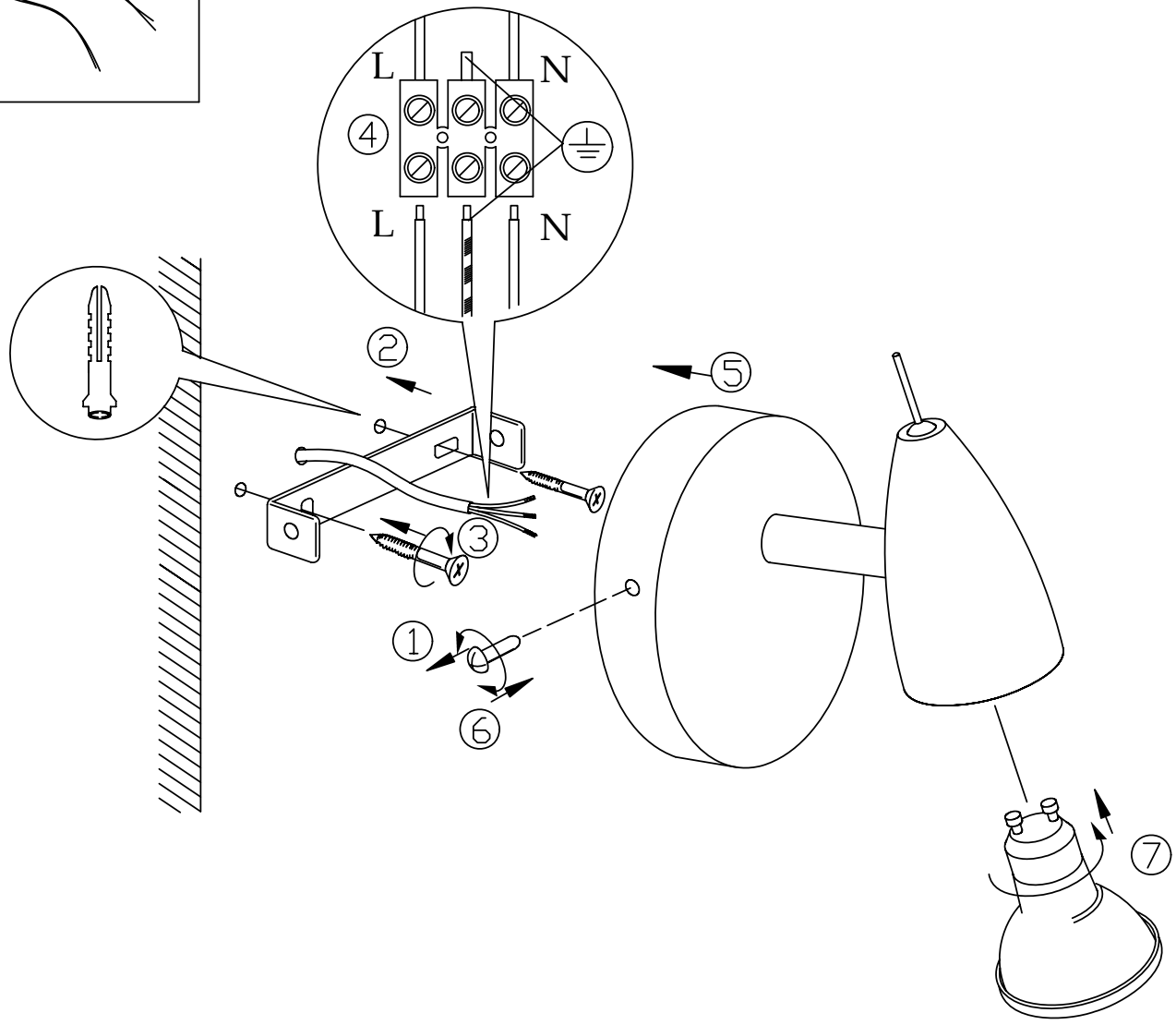

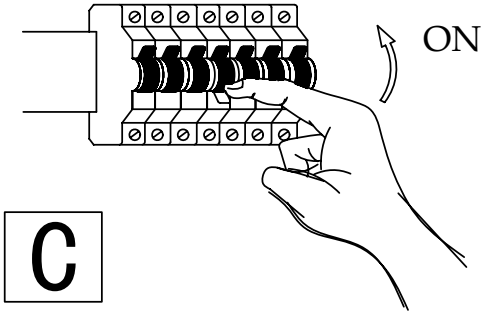

C

BLA93128