Specification of installation

In order to ensure safety use, please notice the following items:

. Read and understand the whole Specification.

. Suitable for the use of 220~240v and 50~60Hz.

. Please wear gloves as installment and avoid rot on the surface of plating.

. Must be installed on the fixed places and be checked annually.

. Please turn off the lighting source by soft cloth as cleaning prohibited to use of rotted detergent.

. Please connect with the local sales service centhr when there are any abnormality.

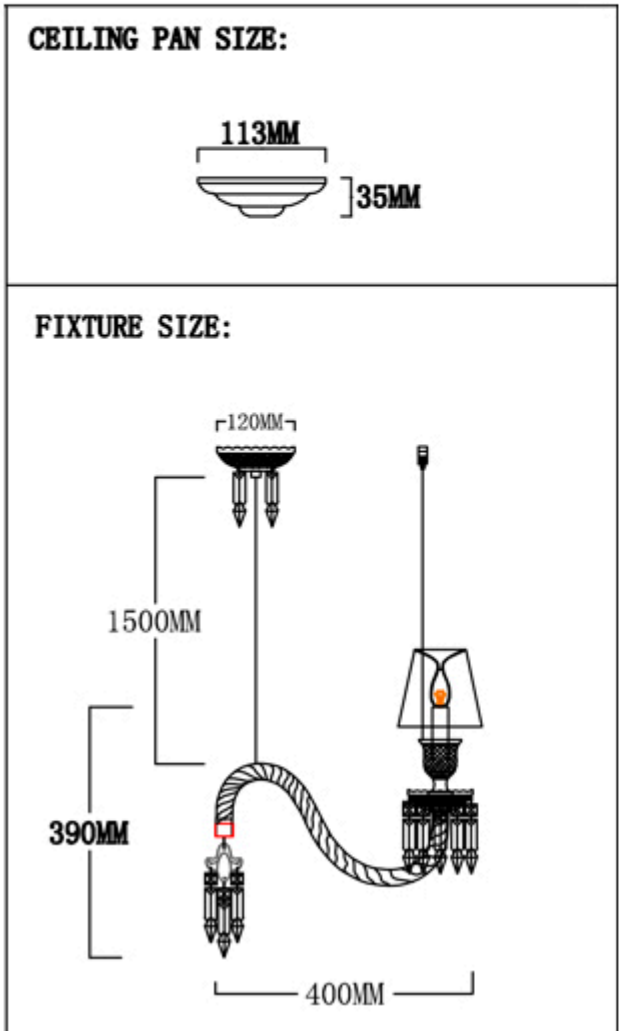

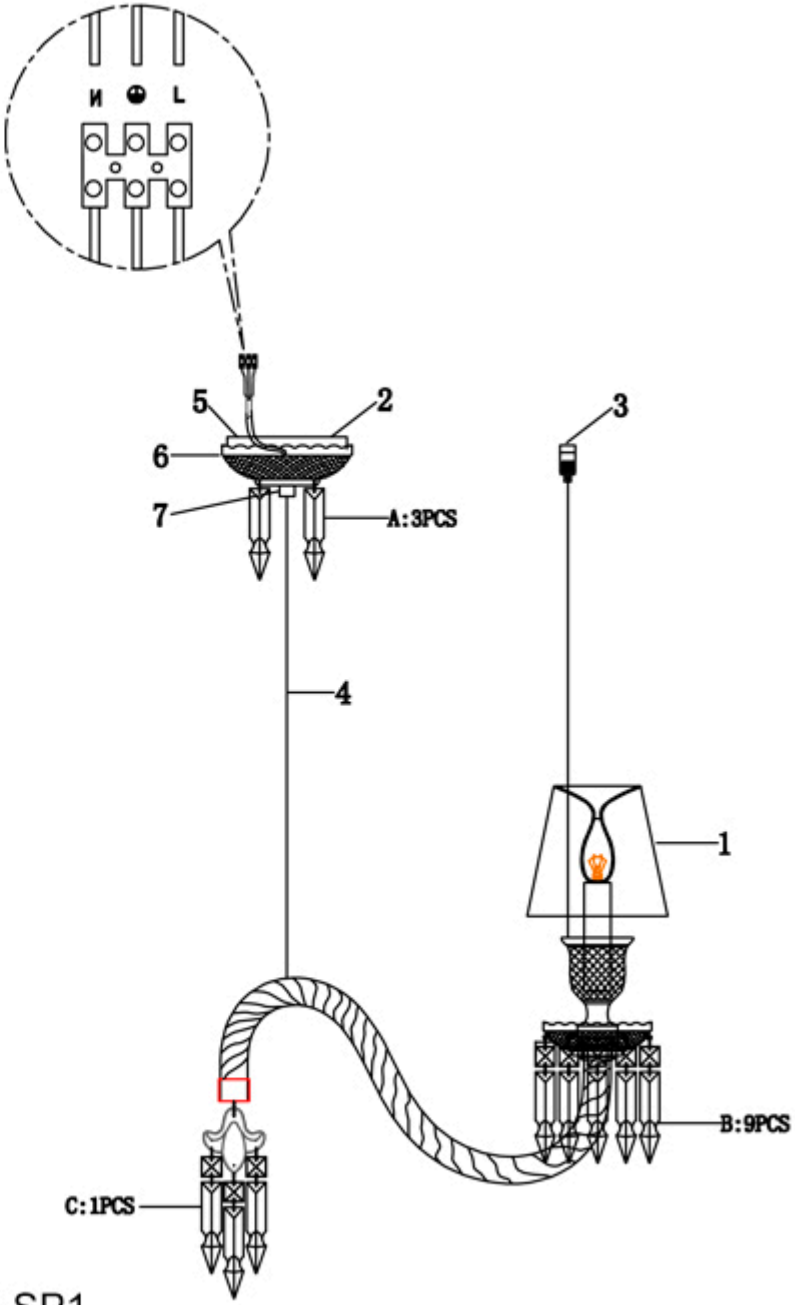

Product coding: PRINCESS SP1