ST LUCE

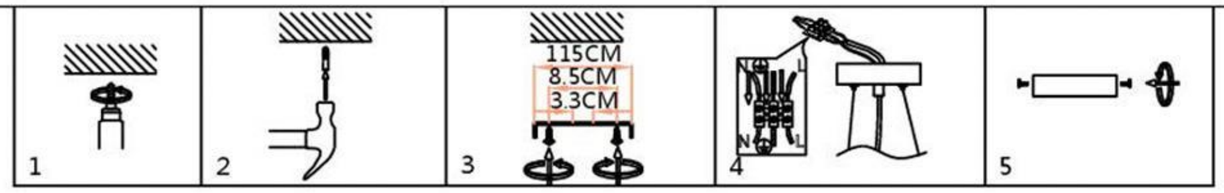
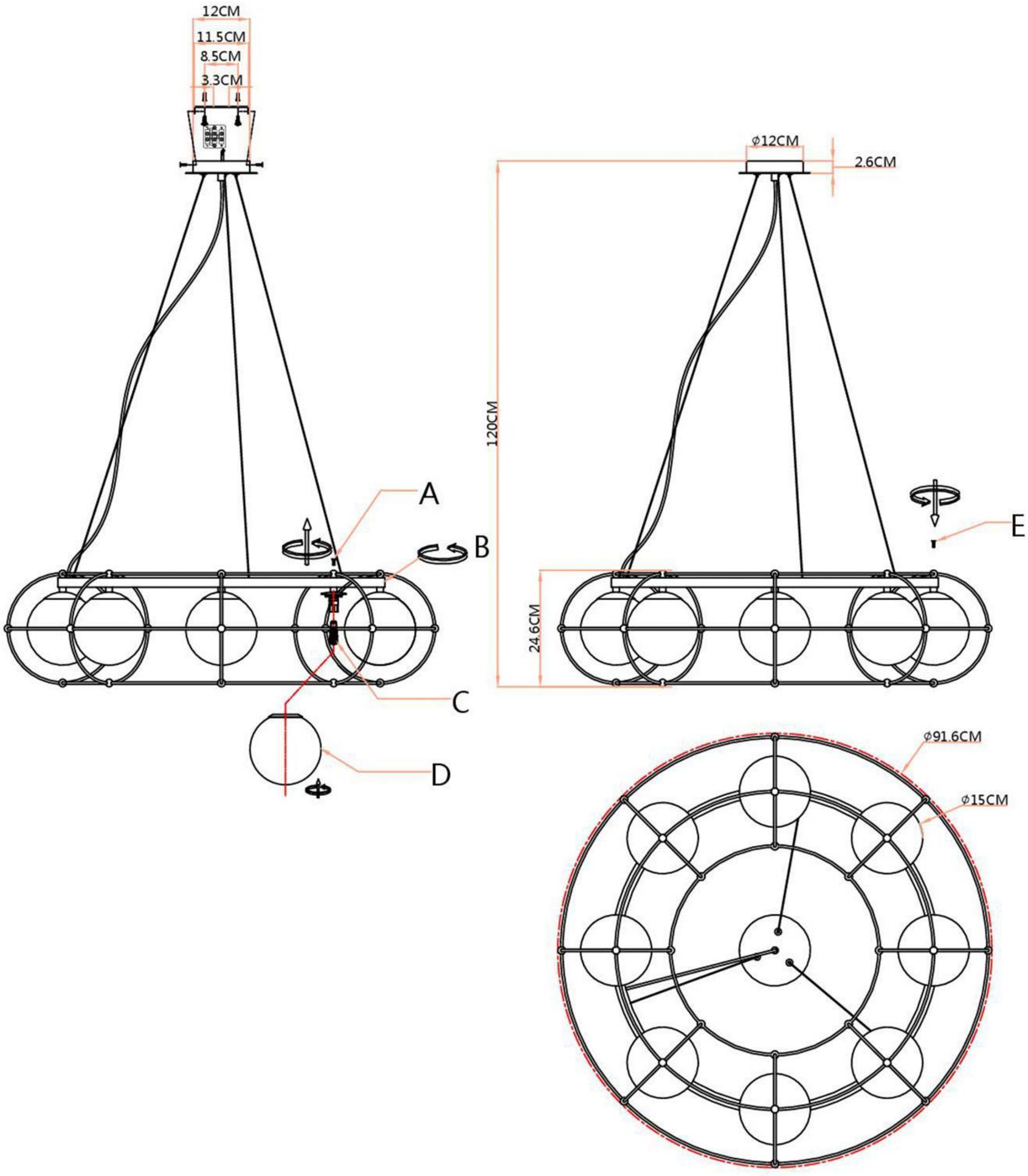
SL1189.403.08